WILFLEY

CENTRIFUGAL PUMPS

Heavy Duty
Chemical
Processing
Pump

Model **A9**

Wilfley Model A9 Heavy Duty Chemical Processing Pump

A Legacy of Continuous Innovation

Arthur Redman Wilfley was an inventor and entrepreneur, whose sheer hard work and determination fueled the prosperity of his lead and silver mine near Leadville, Colorado in the late 19th century. His interest in centrifugal pumps arose as he applied his ingenuity towards solving the hardships of pumping slurries in the mine, in the form of the first packingless pump.

Wilfley's first commercially available pump was sold in 1919 and was built around his ingenious concept of utilizing an expeller to generate a dynamic, centrifugal seal. He continued to perfect the expeller design and received a patent in 1920. The dynamic seal continues to be the unique hallmark of Wilfley pumps.

From Slurries to Chemicals

As the Wilfley expeller was being quickly adopted in the mining industry, a similar need was noted in the chemical processing marketplace. Although most chemicals were free of solids, the flushed packing seals of the era significantly diluted the product.

After numerous tests and engineering innovations, the Wilfley Model AB chemical pump was developed using the company's expeller sealing technology and enjoyed great success. Since the 1933 launch of the Model AB, Wilfley's culture of continuous improvement led to the achievement of significant milestones in chemical pumping with the AC and AF models.

The Chemical Industry Unites

Not long after the advent of the American Voluntary Standard (AVS), a dimensional envelope and performance standard was developed in the form of the ANSI B73.1 specification. In response, Wilfley developed the Model AG in 1973 to incorporate the many benefits of an expeller seal with the core tenets of the new standard: adjustable impeller, back pull-out capability and dimensional interchangeability.

As air emission requirements became more stringent, Wilfley responded with the Model A7, building upon the success of its predecessors by increasing operating efficiencies and intrinsic safety with sealing redundancy.

The most highly developed Wilfley chemical pump is now available with the Model A9, including expanded hydraulics, increased power capabilities, improved dynamic sealing and the most reliable static seal available. It is conservatively designed and robustly constructed to offer high reliability in the most difficult applications.

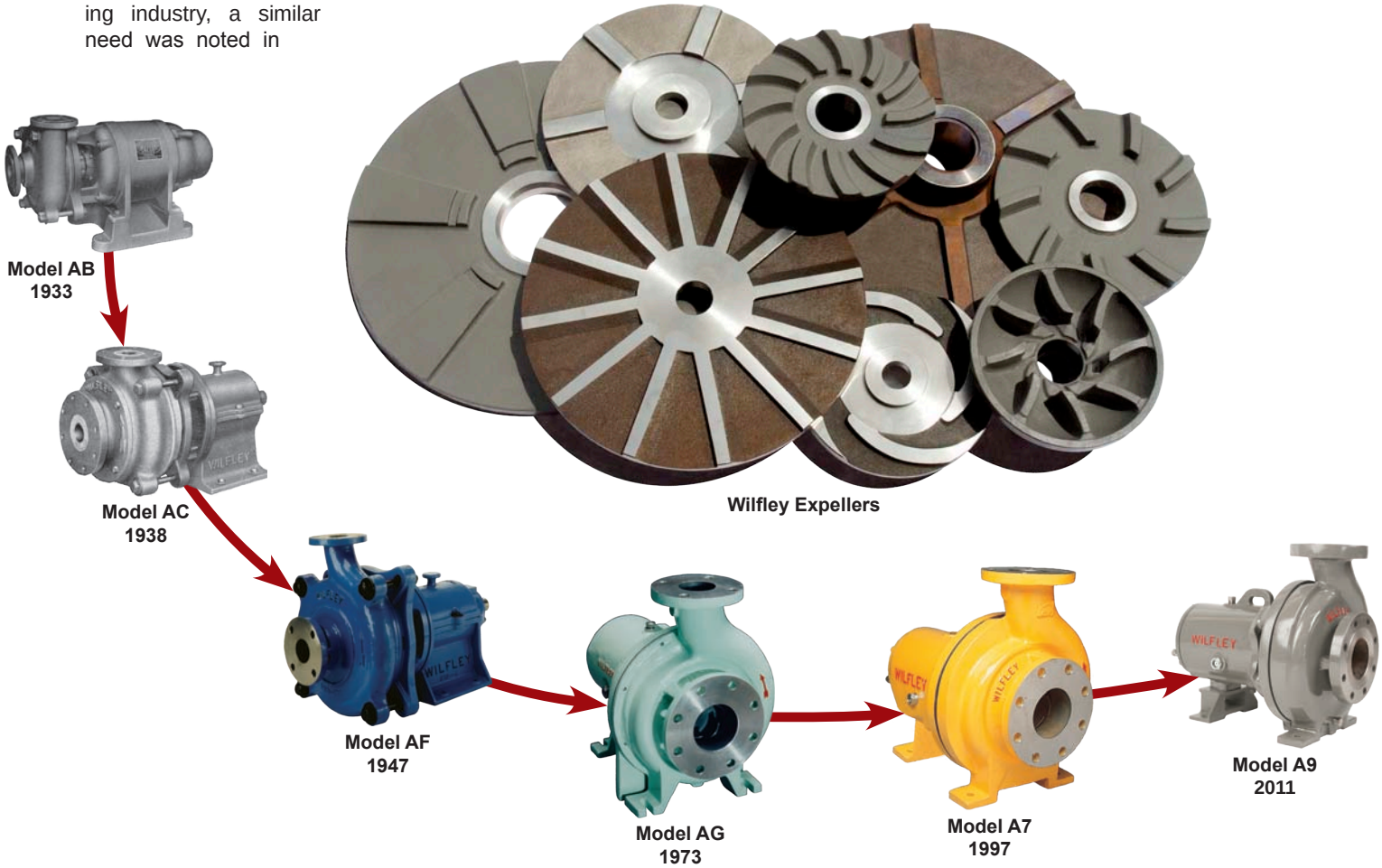

Wilfley Dynamic Seal

Features and Benefits:

- Increases production by reducing down time
- A cost effective solution that can easily be rebuilt on-site
- Excellent solids/slurry handling capabilities
- Effectively manages crystallizing and scaling fluids
- No mechanical seal and associated flush system required
- Inherently safe without gland packing or frictional heat
- No dilution of your pumped product
- Operational abuse tolerant, e.g. cavitation and vibration
- Dry running capability
- Single source pump & seal responsibility

How the Wilfley Dynamic Seal works:

- An air barrier (A) is established during pump operation by centrifugal forces generated at the expeller.
- This air barrier successfully isolates the pumped fluid from the shaft.
- The DryLock II™ seal provides positive sealing at pump startup and shutdown

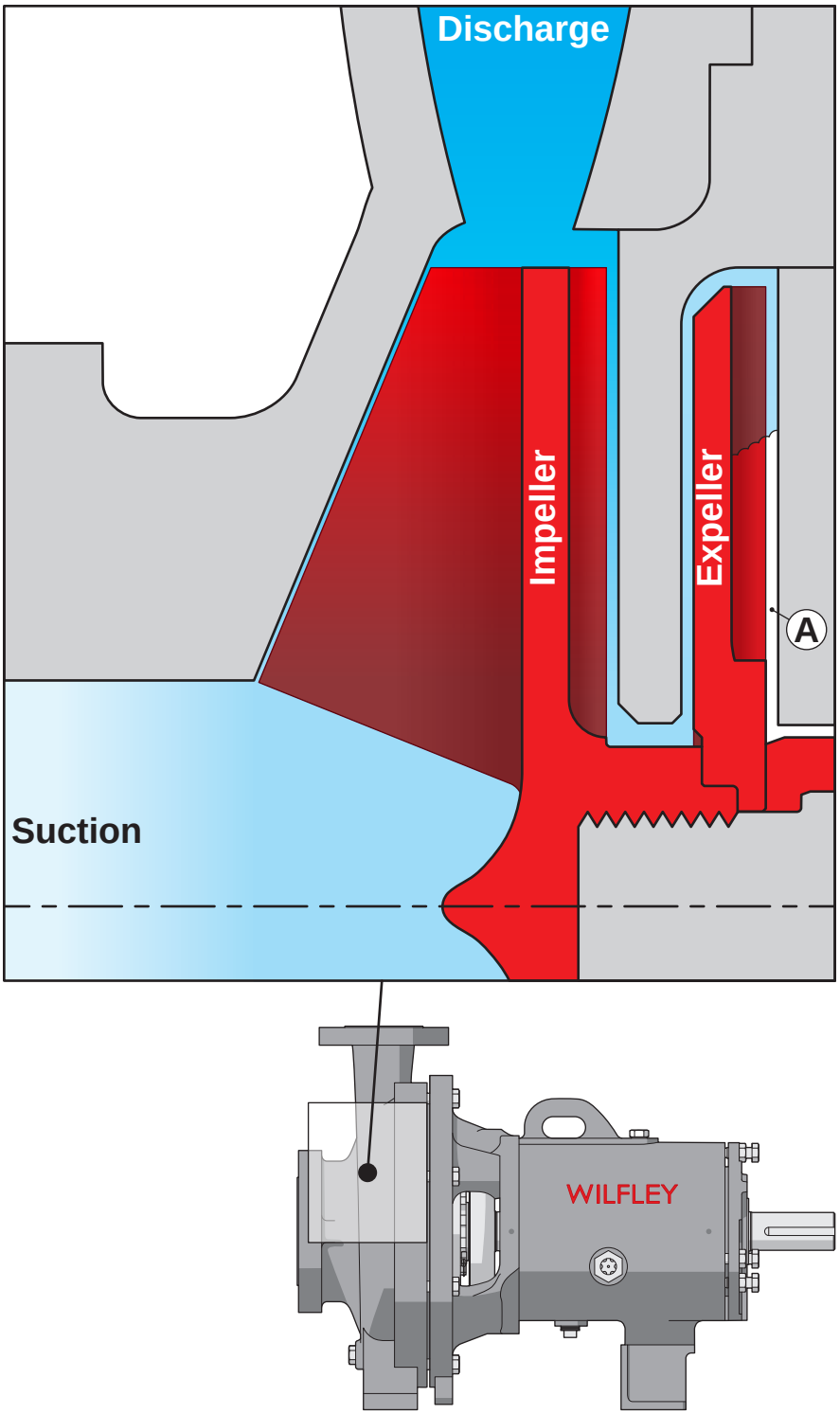

Scan this code with your smartphone to view an animation on the Dynamic Seal

Wilfley Model A9 Features and Benefits

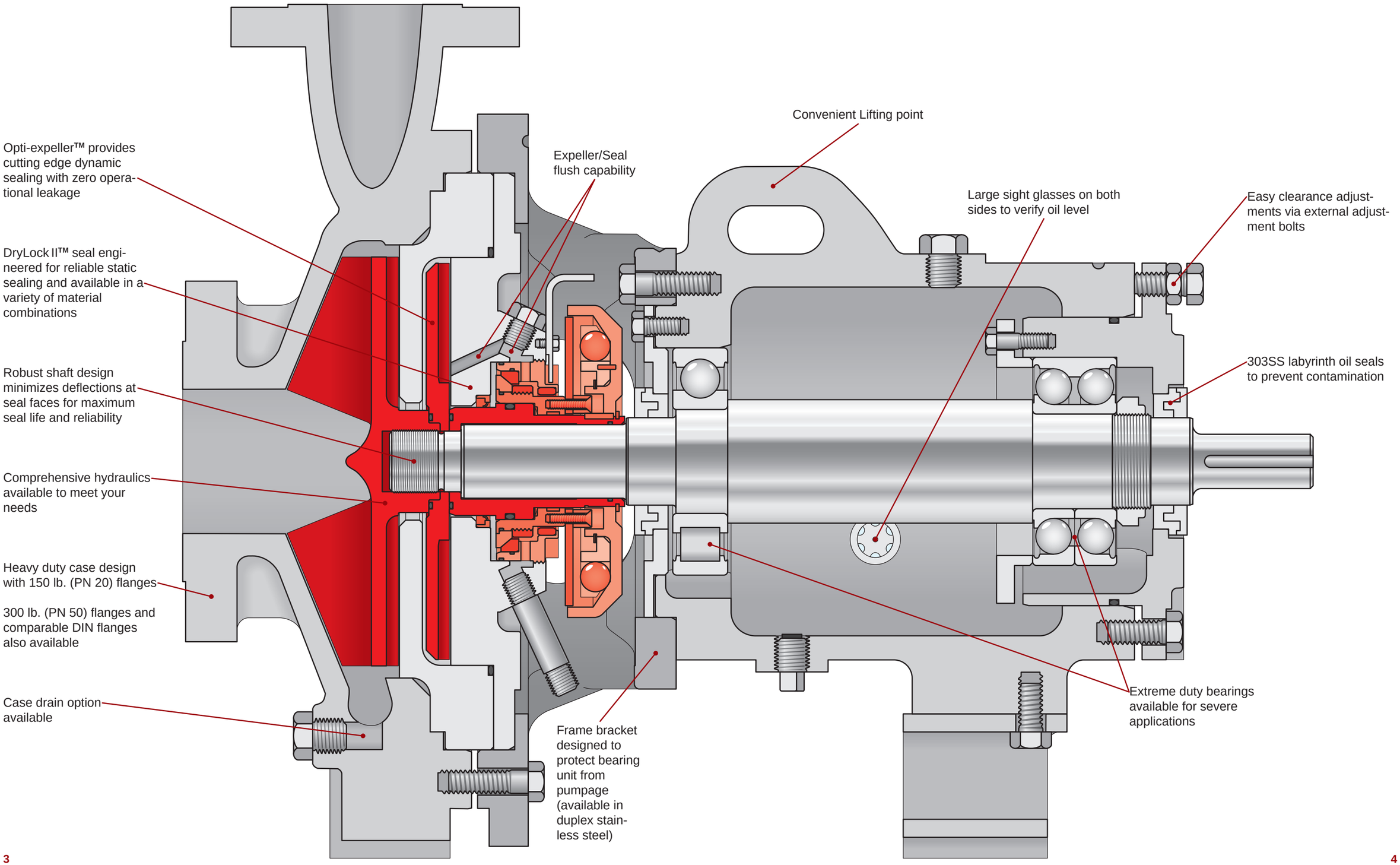

Wilfley DryLock II™ Seal

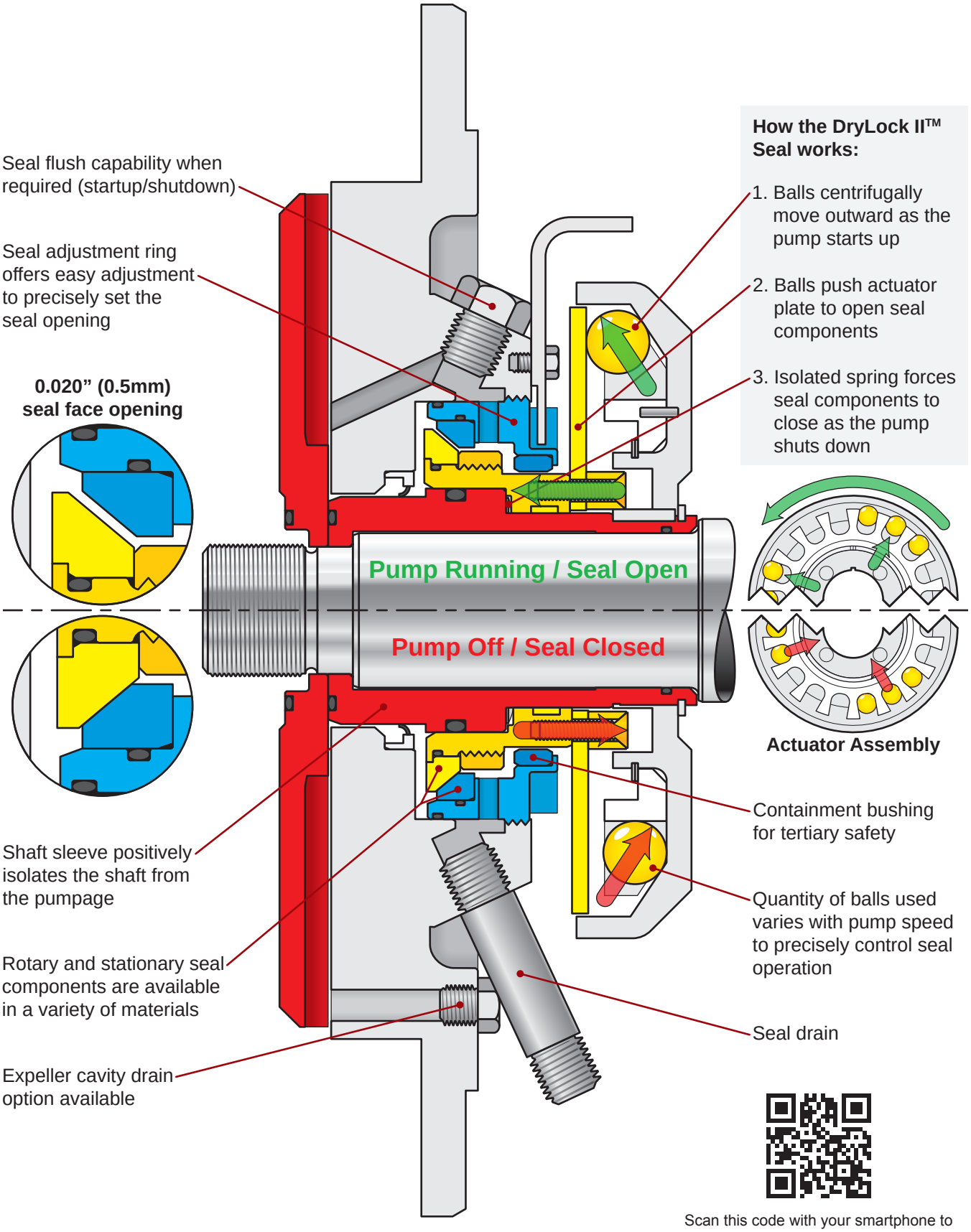

Scan this code with your smartphone to view an animation on the DryLock II™ Seal

Model A9 Pump Capacities

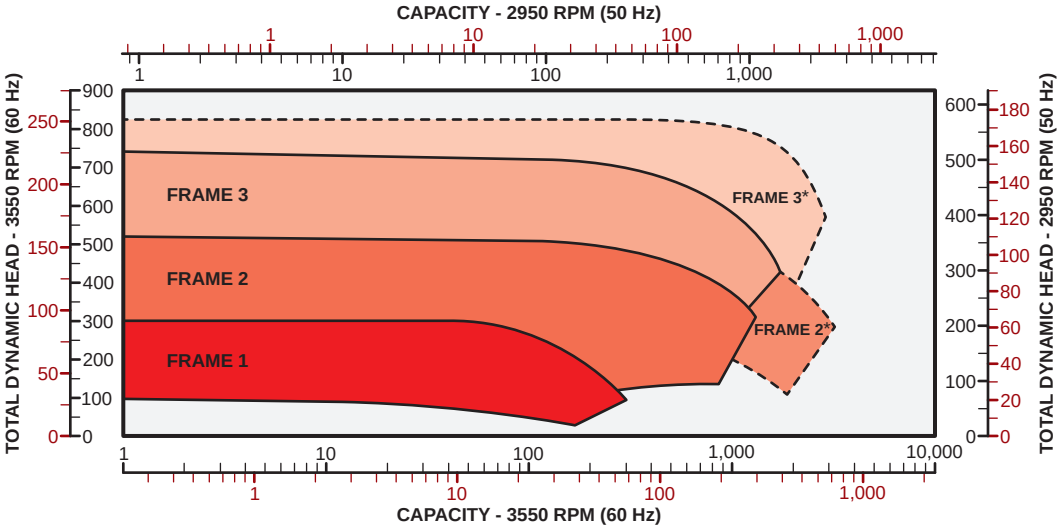

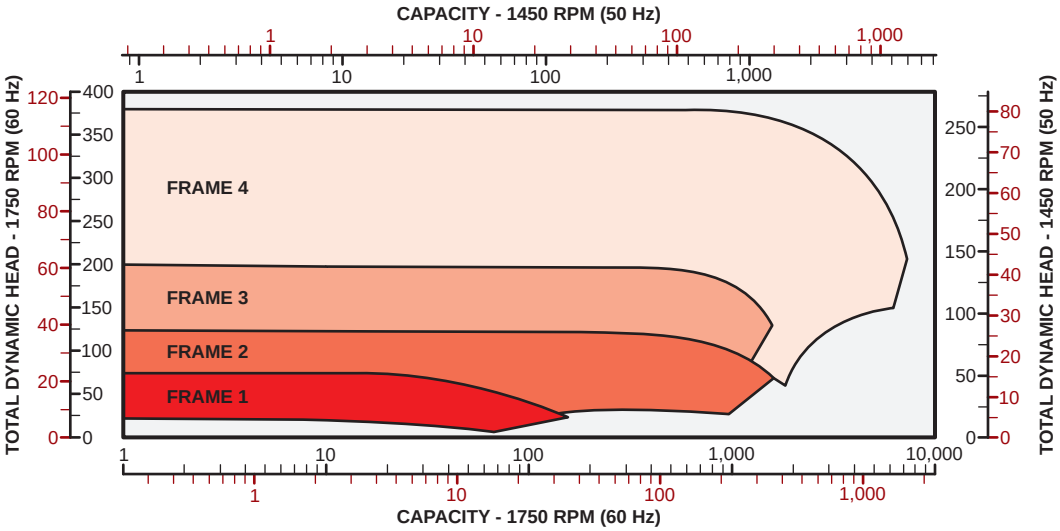

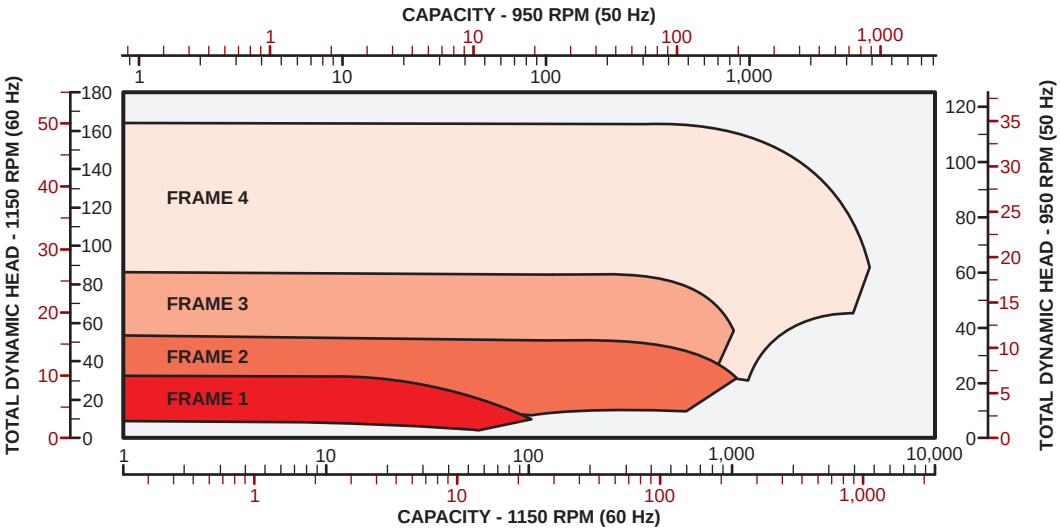

Black = USGPM & feet
Red = m^3/hr & meters
* Limited to 3000 RPM

VISIT

www.WILFLEY.COM

TO SEE OUR FULL RANGE OF PUMPING SOLUTIONS

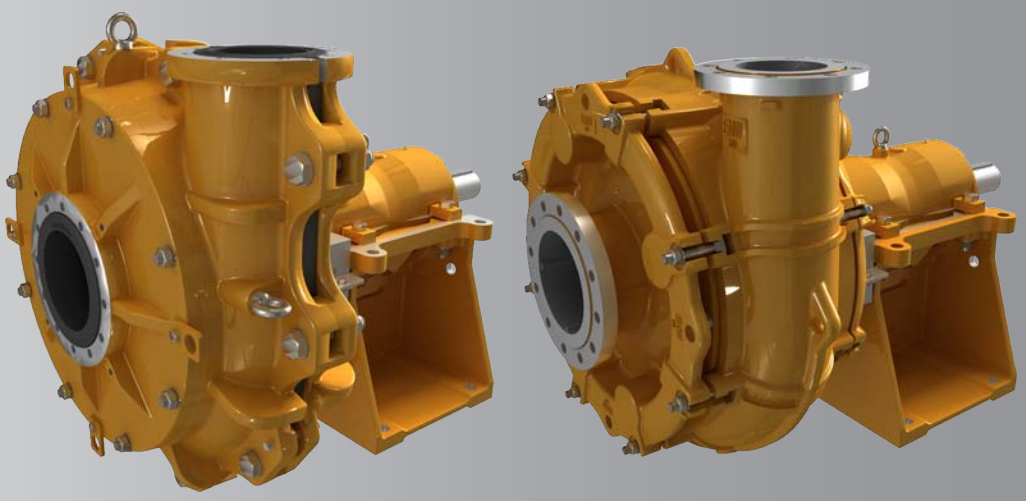

A.R. Wilfley and Sons, Inc.

7350 E. Progress Place, Suite #200
Englewood, CO 80111

Toll Free 1-800-525-9930

Telephone +1 (303) 779-1777

Fax +1 (303) 779-1277

pumps@wilfley.com

WILFLEY